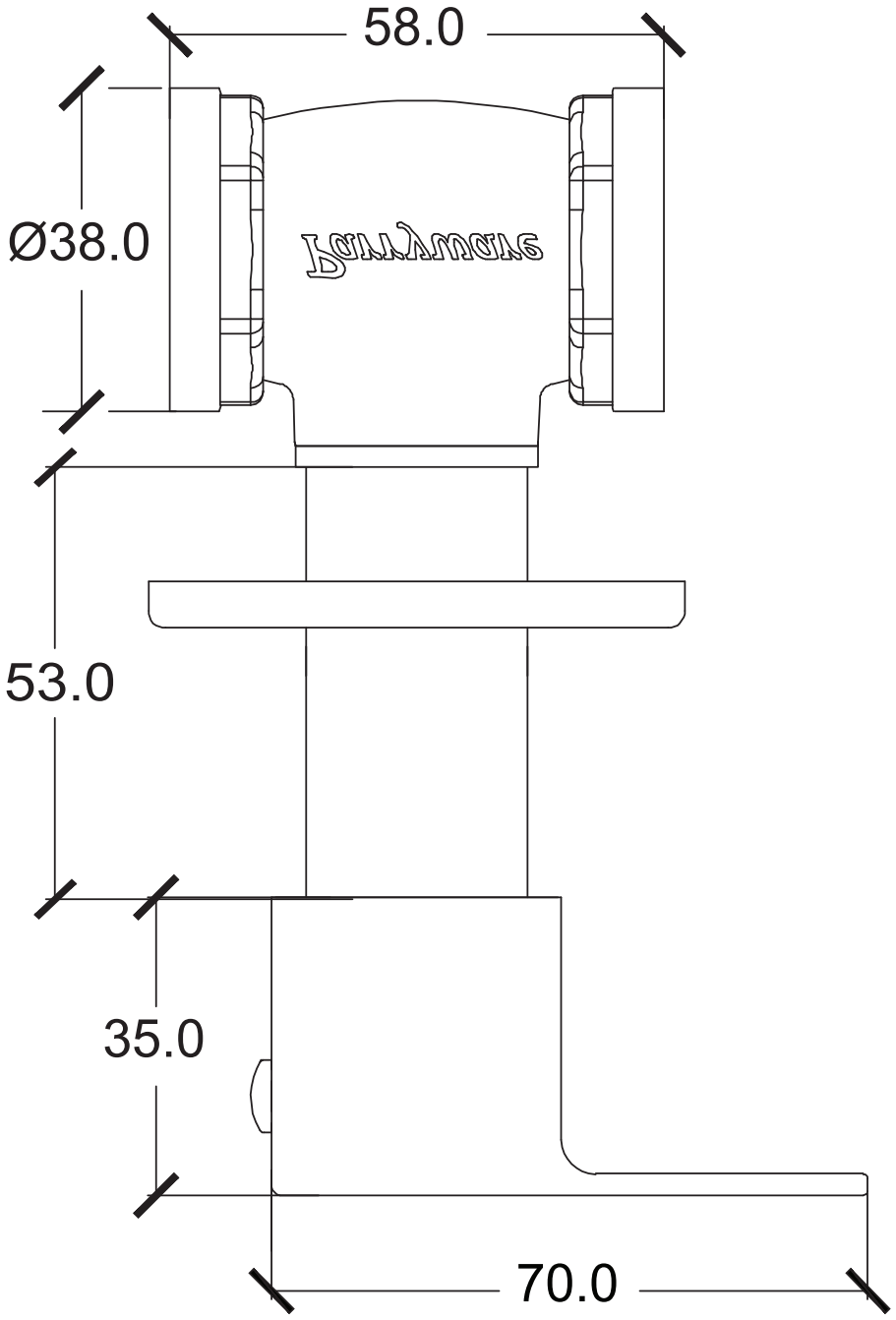
58.0
Ø38.0
53.0
35.0
70.0