Parryware
always in fashion

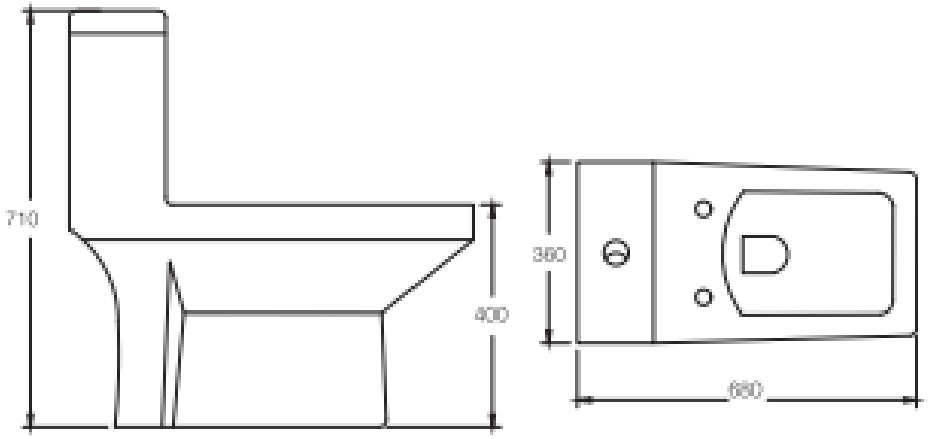

Parryware always in fashion

Roca Bathroom Product Pvt. Ltd.

SKU Code:	C896546
Product Name:	SUTRA SINGLE PIECE
Dimensions:	680 x 360 x 710 (L x B x H)
Unit:	mm