Parryware
always in fashion

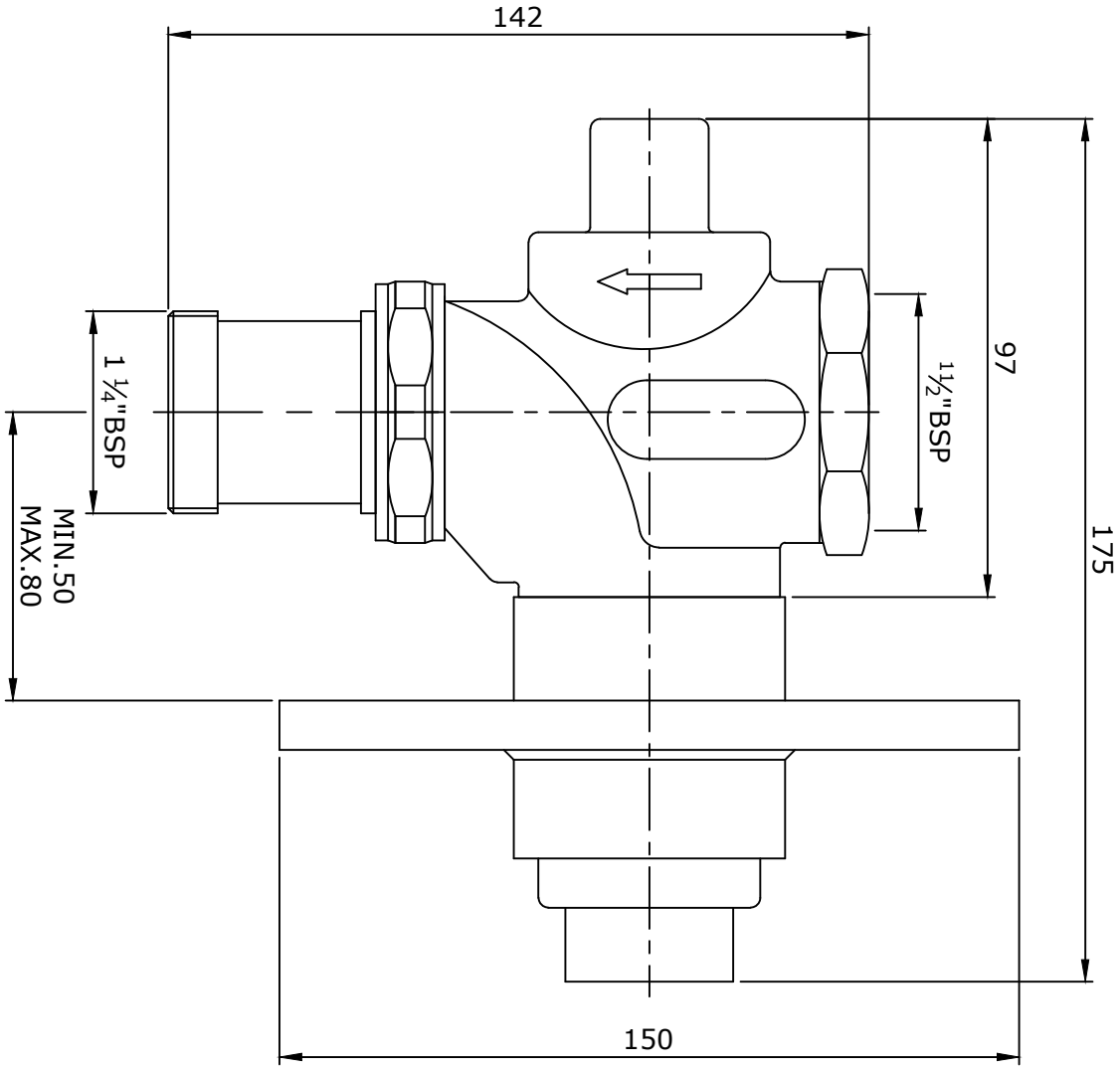

Parryware always in fashion	Roca Bathroom Product Pvt. Ltd.
SKU Code:	T3305A1
Product Name:	FLUSH VALVES CONCEALED DUAL FLUSH VALVE (40MM DIA.)