Parryware
always in fashion

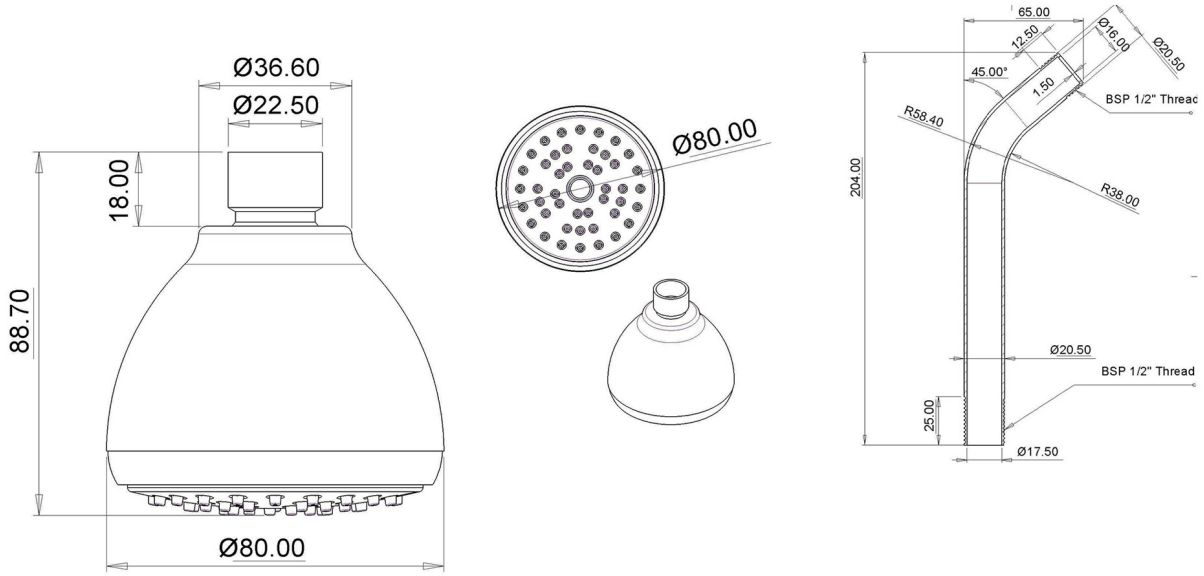

Parryware always in fashion

Roca Bathroom Product Pvt. Ltd.

SKU Code: T9885A1

Product Name: OVERHEAD SHOWERS COLLECTION ALPHA SHOWER WITH SHOWER ARM (80MM)