Parryware
always in fashion

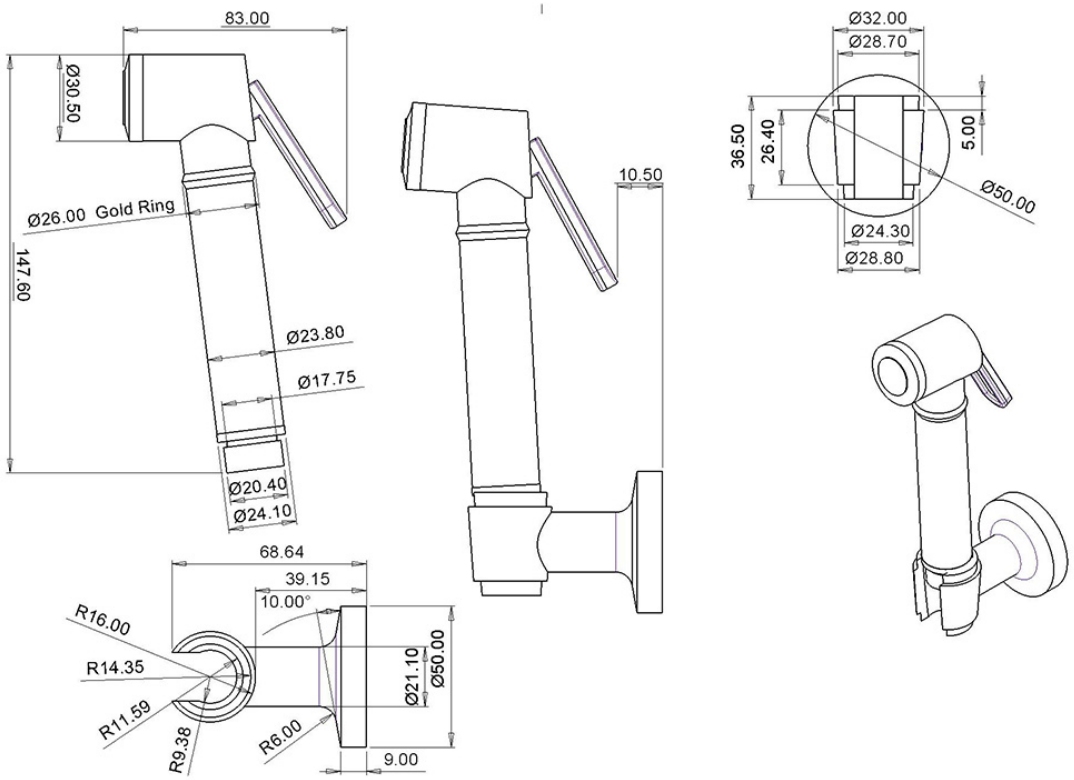

Parryware always in fashion

Roca Bathroom Product Pvt. Ltd.

SKU Code: T9941A1

Product Name: HEALTH FAUCETS COLLECTION CARDIFF WITH SS HOSE + HOOK (BRASS)