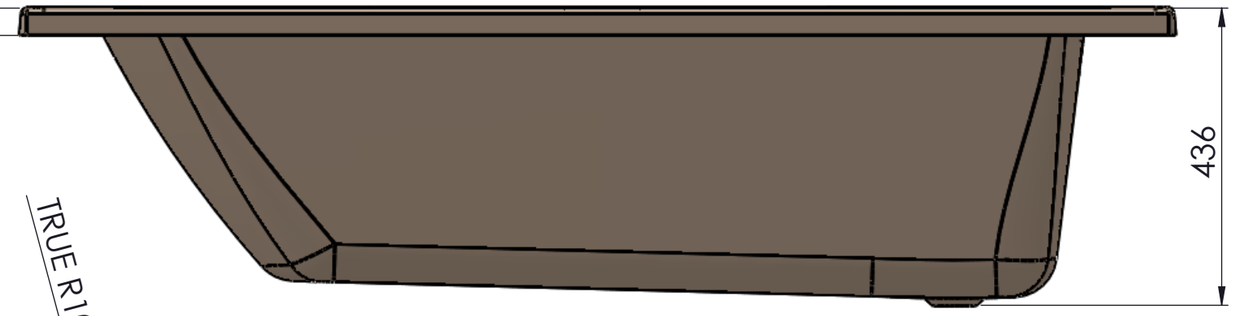


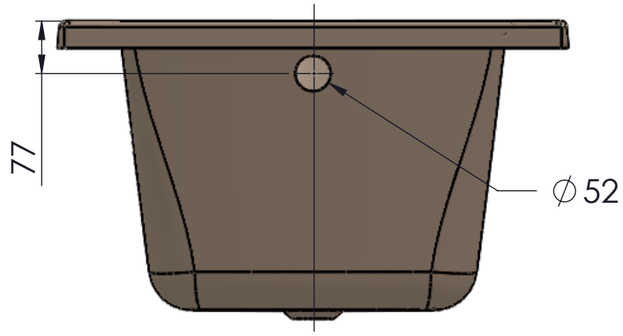


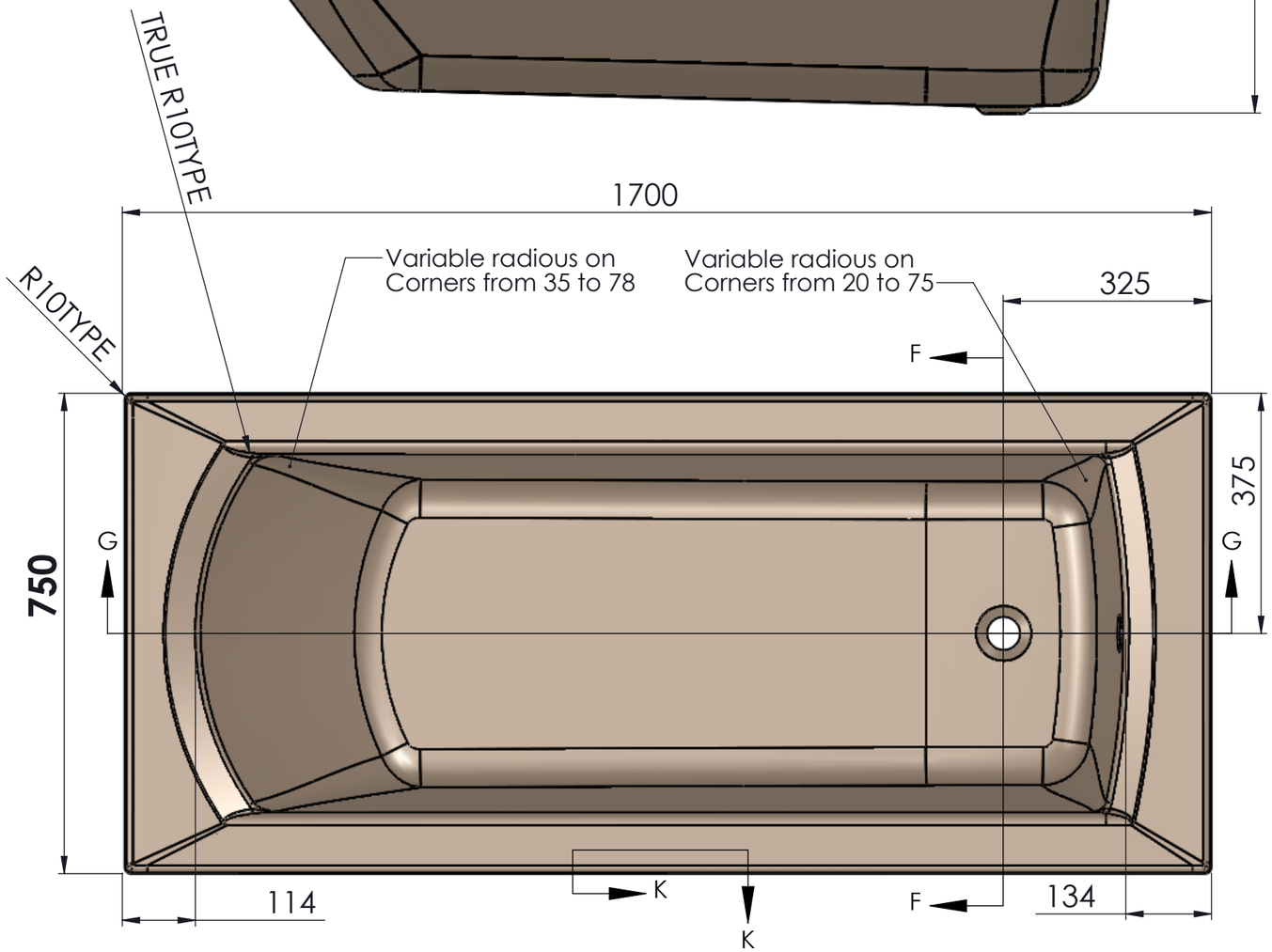


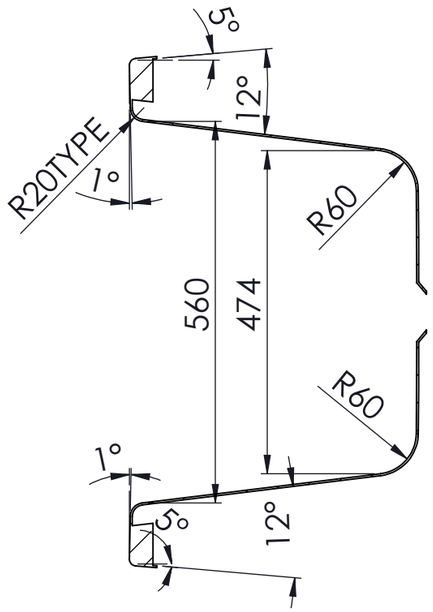


SECTIONAL PROFILE F-F

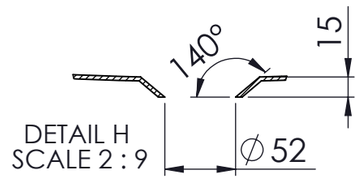


DETAIL H
SCALE 2 : 9

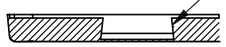

slot for control&
regaulator

SECTION K-K
SCALE 1 : 9

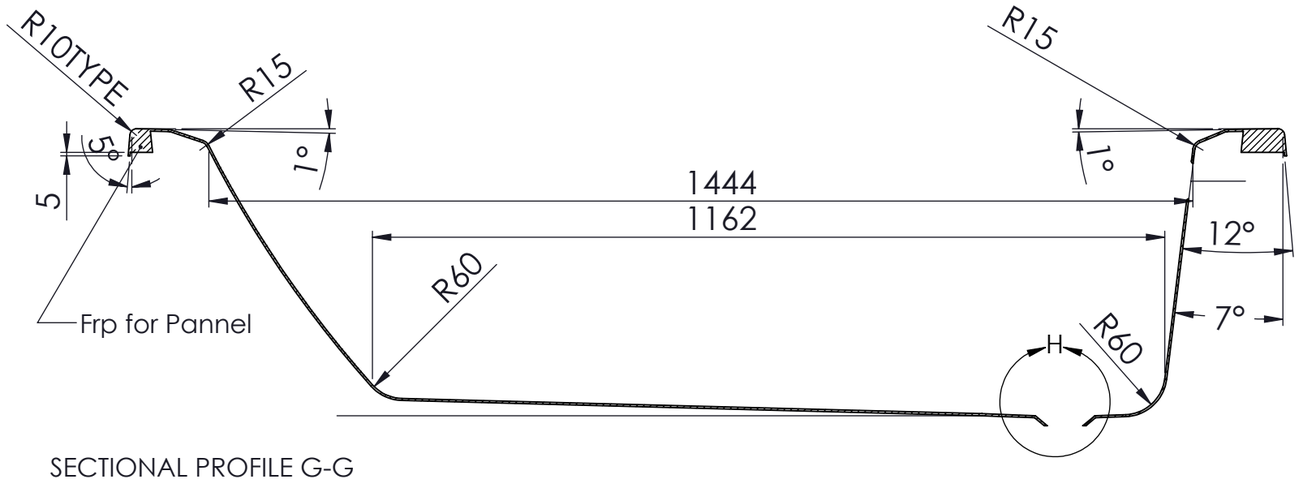


SECTIONAL PROFILE G-G

*Ref Data -:Linea(Poolspa)

| REV. | DATE | REV. HISTORY | Old Dim. | New Dim. |
|---|---|---|---|---|
| | | | | |

UNLESS OTHERWISE SPECIFIED
All dimension are in MM.
All Projection are **Third angle.**
Tolerance on Machined dimensions
-Medium IS 2102
All sharp edges are to be removed.

| | |
|---|---|
| Drawn by | Amit K. |
| Checked by | Suman M. |
| Approved by | Manish M. |
| Date | 17/08/2012 |
| Outer Surface Area | 250.7 Dm2 |
| Weight | Kg |
| Scale | NTS |

# Roca Bathroom Products Pvt. Ltd.

BHIWADI (Taps Unit), India

This drawing & design is property of RBPPL It is a Confidential disclosure which must neither be copied nor used in any manner detrimental to their intrests.

| | | | |
|---|---|---|---|
| TITLE - Tub 1700x750 | | | |
| TYPE - | Range- Laguna(Parryware) | Sheet 1 of 1 | |
| Material Acralic | Drg. No. W040101 | Rev.No. 0 | Release No. 1 |