Parryware
always in fashion

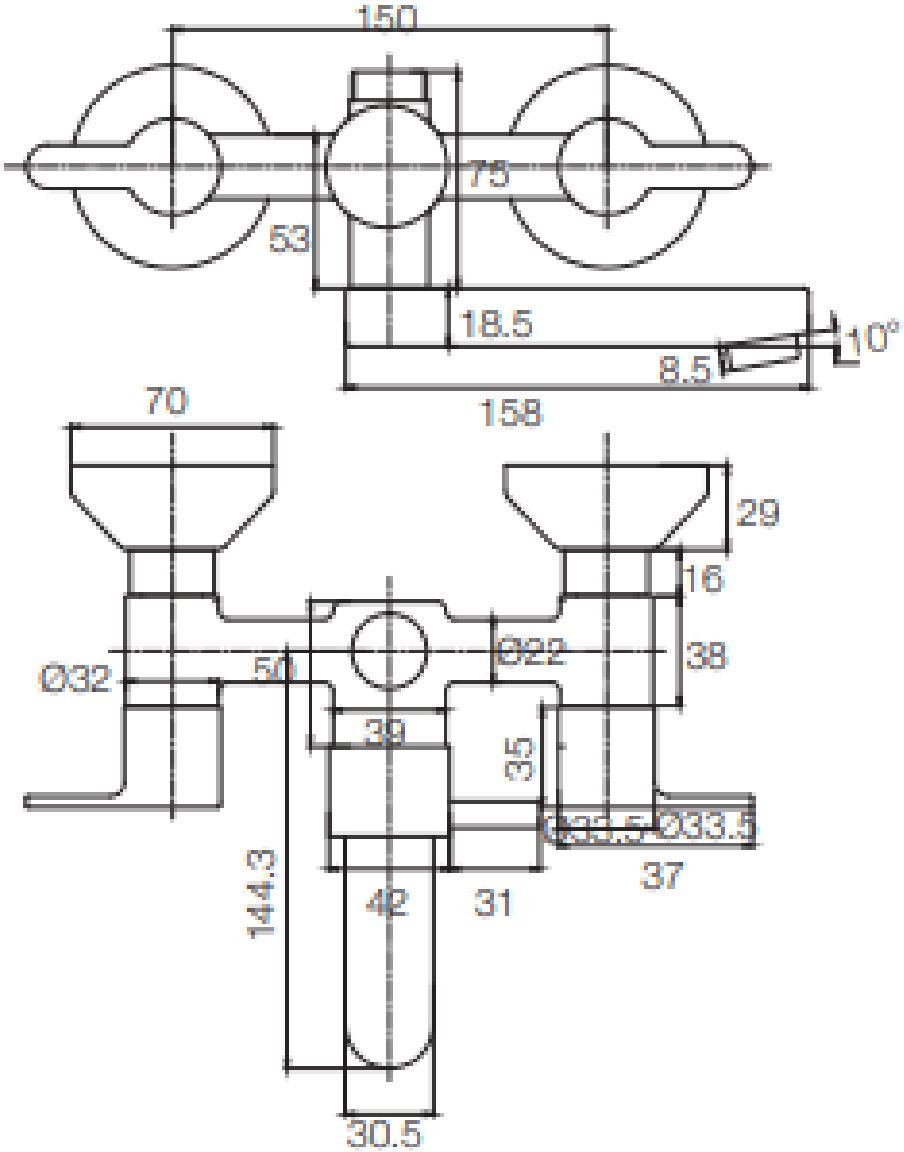

Parryware always in fashion	Roca Bathroom Product Pvt. Ltd.

SKU Code: G5216A1

Product Name: CLARET COLLECTION WALL MIXER 2-IN-1